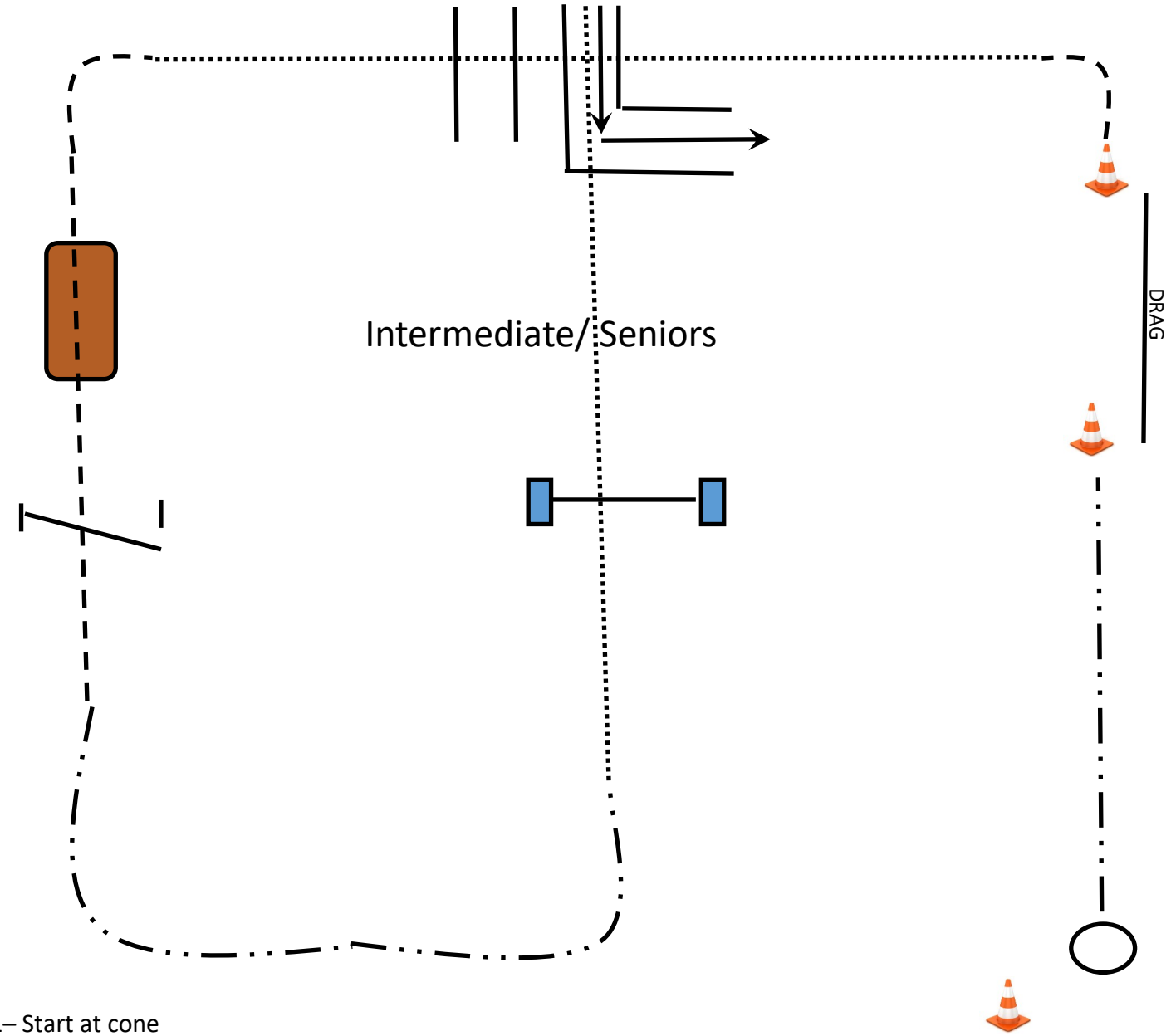


1– Start at cone

2– Circle pivot on the haunches to the RIGHT

3- lope RIGHT lead to log drag

4– Drag log from 1st cone to 2nd cone

5- Walk around corner, and pick up trot.

6- Trot over logs.

7– Before corner break to a walk and walk over bridge

8– Walk to gate, open gate, RIGHT HAND

9– Lope LEFT lead around bend

10– Slow to trot, go over jump

11– Trot thru chute of L

12– Stop after passing logs and back through L
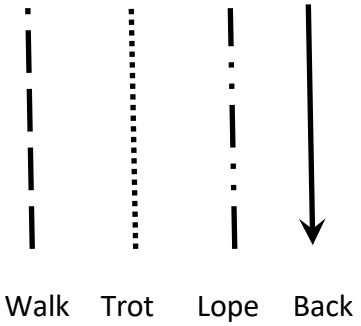
13– Acknowledge judge and exit arena